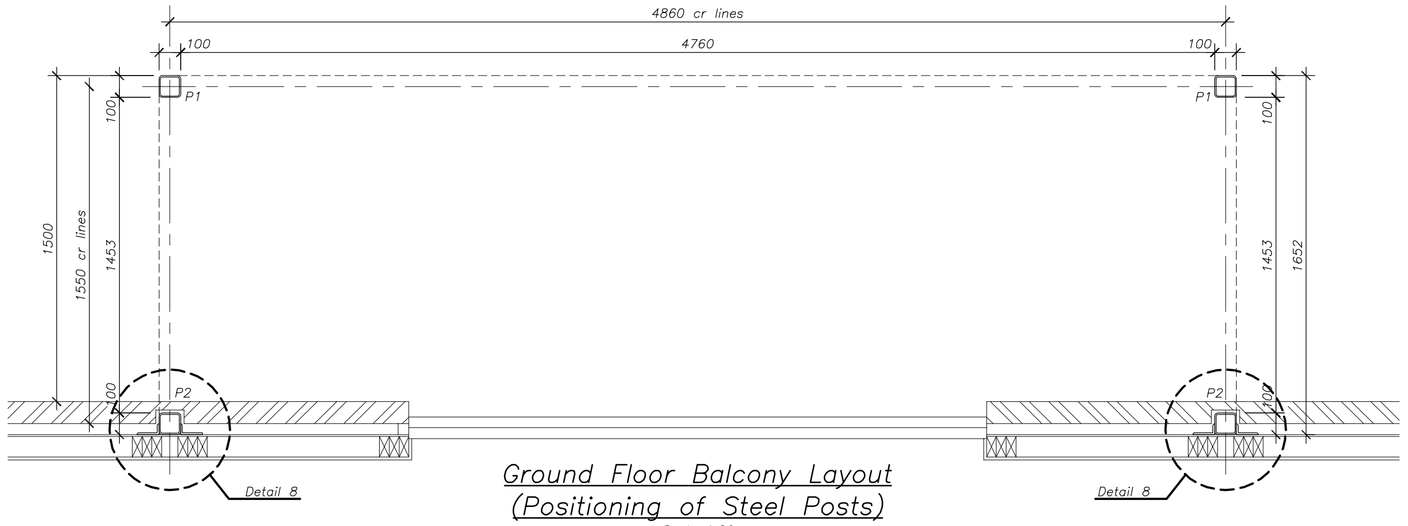

Ground Floor Balcony Layout
(Positioning of Steel Posts)
Scale 1:20

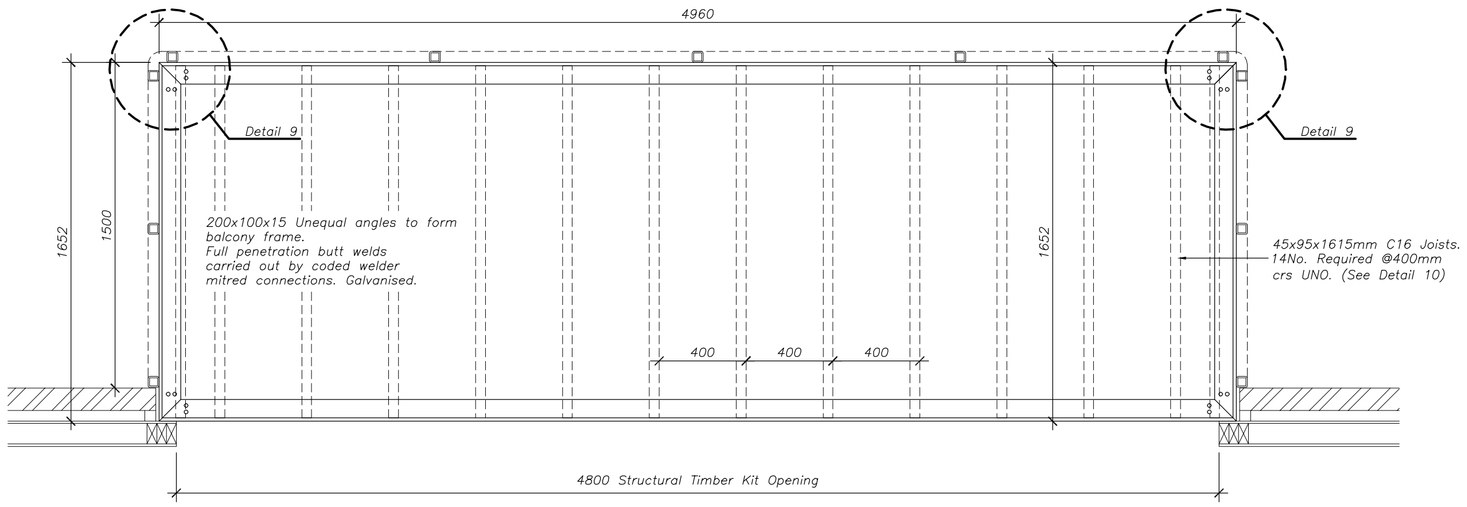

Upper Floor Balcony Layout
Scale 1:20

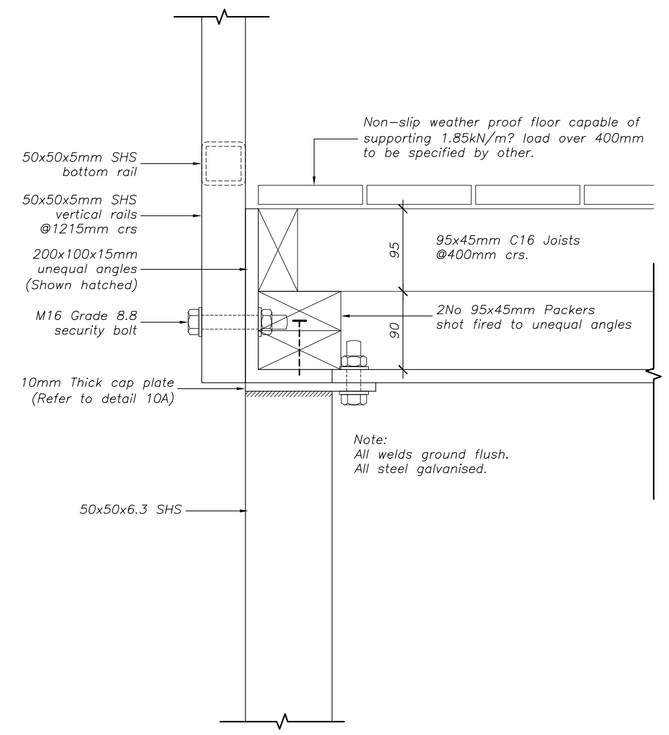

Detail 10
(Typical Handrail Connection)
Scale 1:5

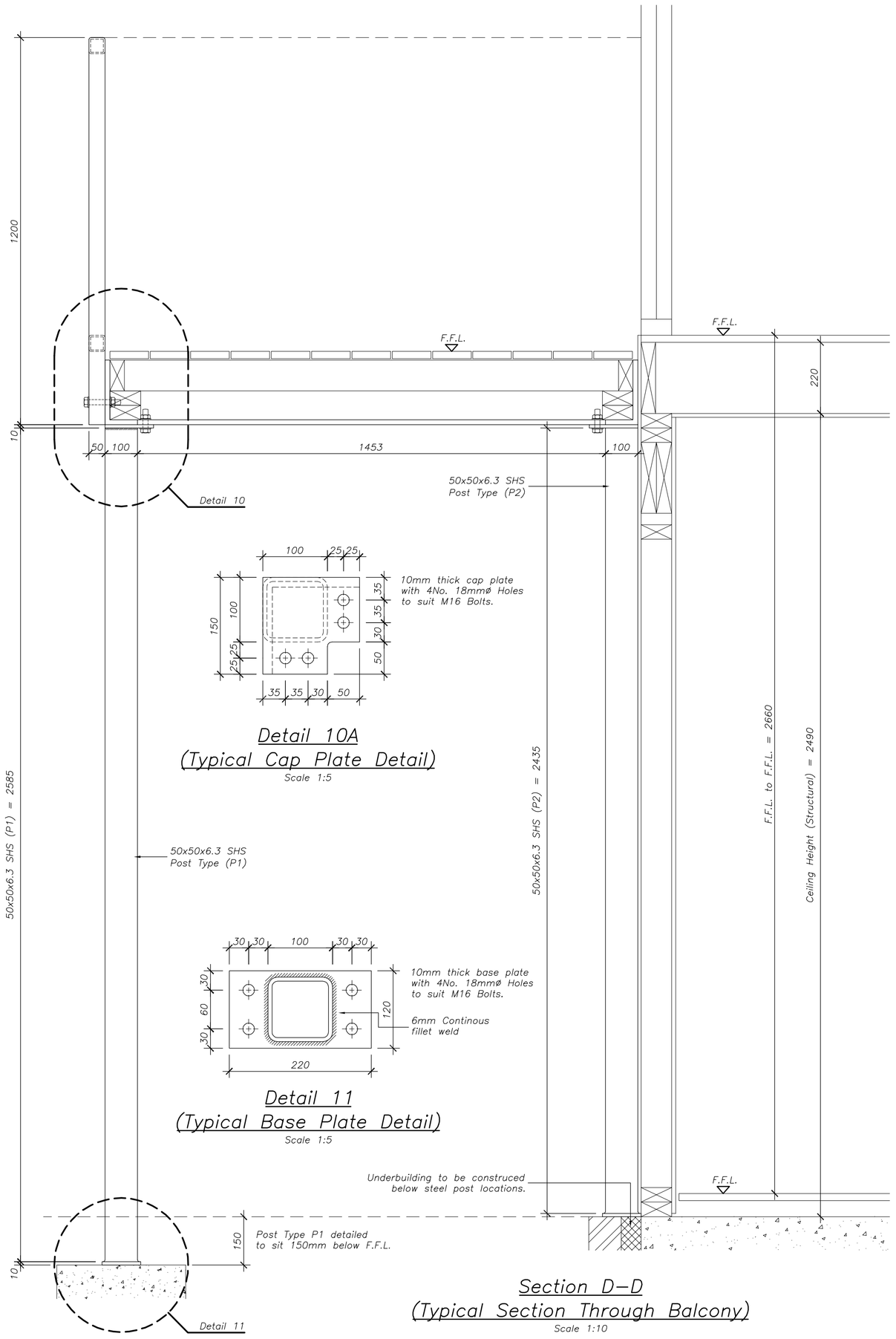

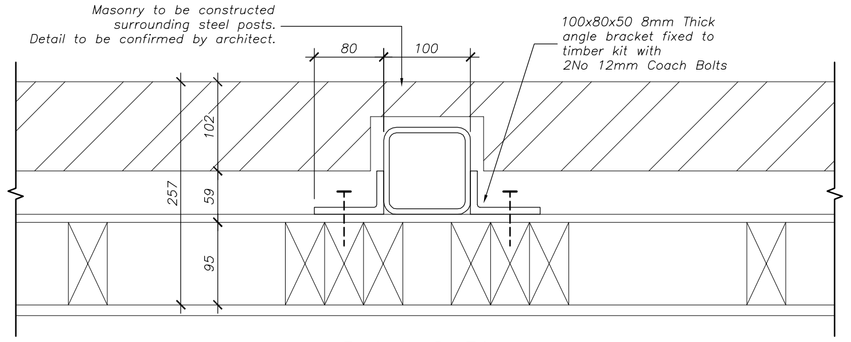

Detail 8 Plan
(Post P2 Fixing Details)
Scale 1:5

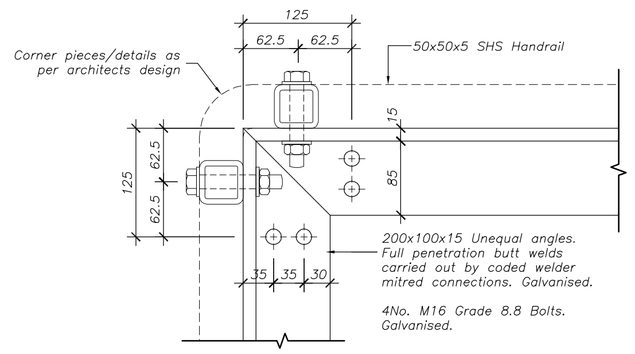

Detail 9
(Unequal Angle Connection Detail)
Scale 1:5

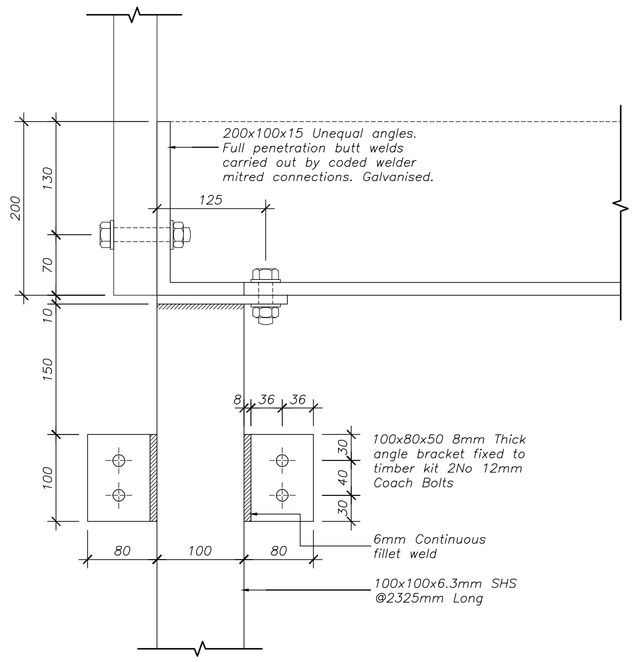

Detail 8 Elevation
(Post P2 Fixing Details)
Scale 1:5

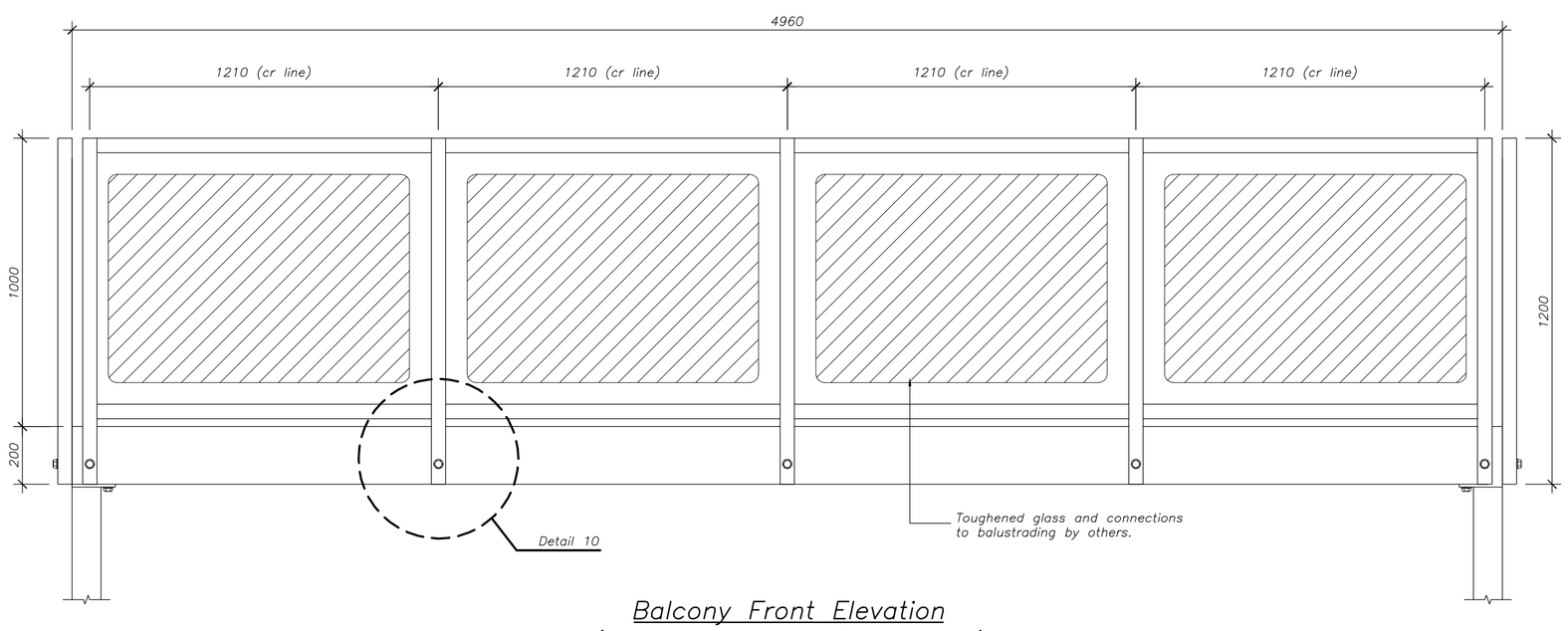

Balcony Front Elevation
(Vertical Handrail Positioning)
Scale NTS

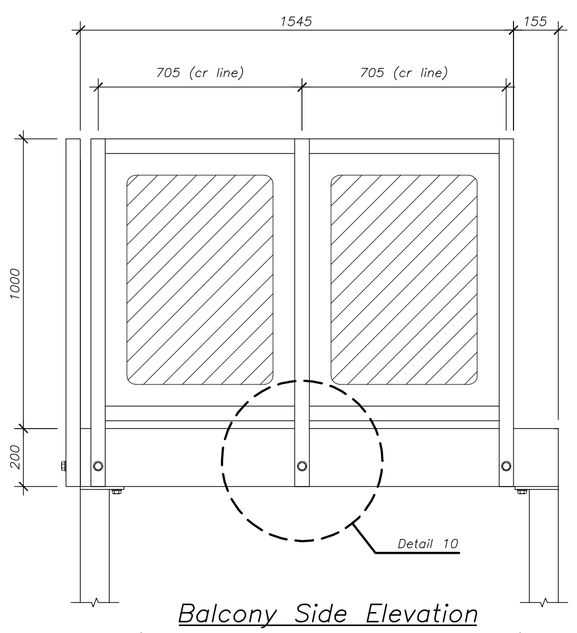

Balcony Side Elevation
(Vertical Handrail Positioning)
Scale NTS

General Notes:

1. All dimensions are in millimetres unless noted otherwise.
2. Dimensions shall not be scaled from this drawing. Any dimensions not shown should be checked on site or verified by the Engineer.
3. Dimensions shown are from hard timber to timber faces unless noted otherwise.
4. No variation to this drawing shall be permitted unless authorised in writing by the Engineer.
5. This drawing shall be read in conjunction with all relevant Engineer's drawings (latest revisions).
6. This drawing shall be read in conjunction with all relevant Architect's drawings (latest revisions).

Timber Kit Notes:

General

This timberkit drawing provides details of timberkit only. All other structural items including roof trusses, masonry support & foundations are to be detailed by others.

All wallplate & vertical alignment drawings should be approved by the project Architect prior to the commencement of any fabrication.

REV.	DESCRIPTION	DRAWN	DATE
DRAWING TITLE	Steel Balcony General Arrangement.	DRAWN BY	
		DATE	
PROJECT		SCALE As Noted	
		STATUS Construction	
CLIENT		DRAWING No.	

dbm consultants
Consulting Civil and Structural Engineers
61/63 Manse Road, Motherwell, ML1 2PW
Tel: (01698)267628 Fax: (01698)275191
Email: dbmc@dbmconsultants.co.uk
www.dbmconsultants.co.uk